smij pa-000148-1-AA-045.2P-F-O-H

REV	MODIFICA DESCRIZIONE	ECN	DATA	REVISIONATO DA	APPROVATO DA

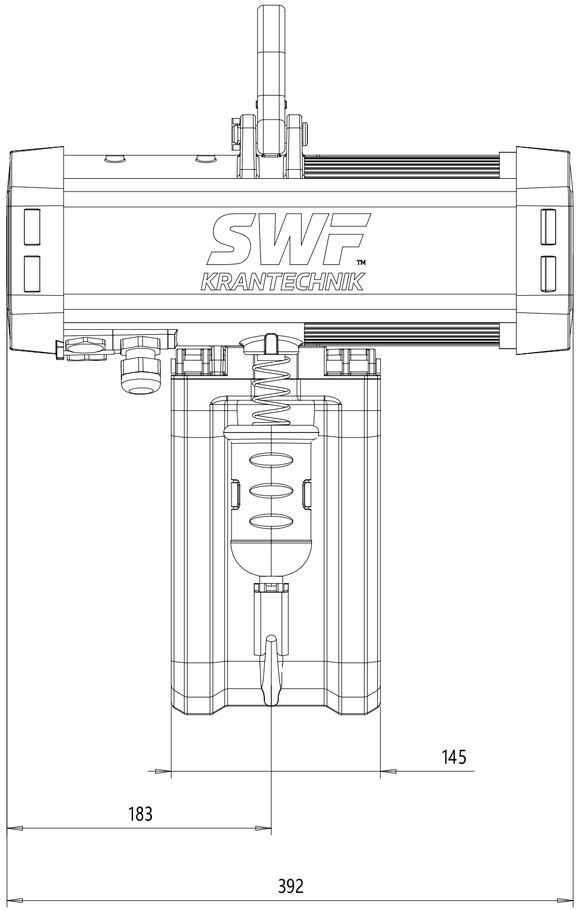

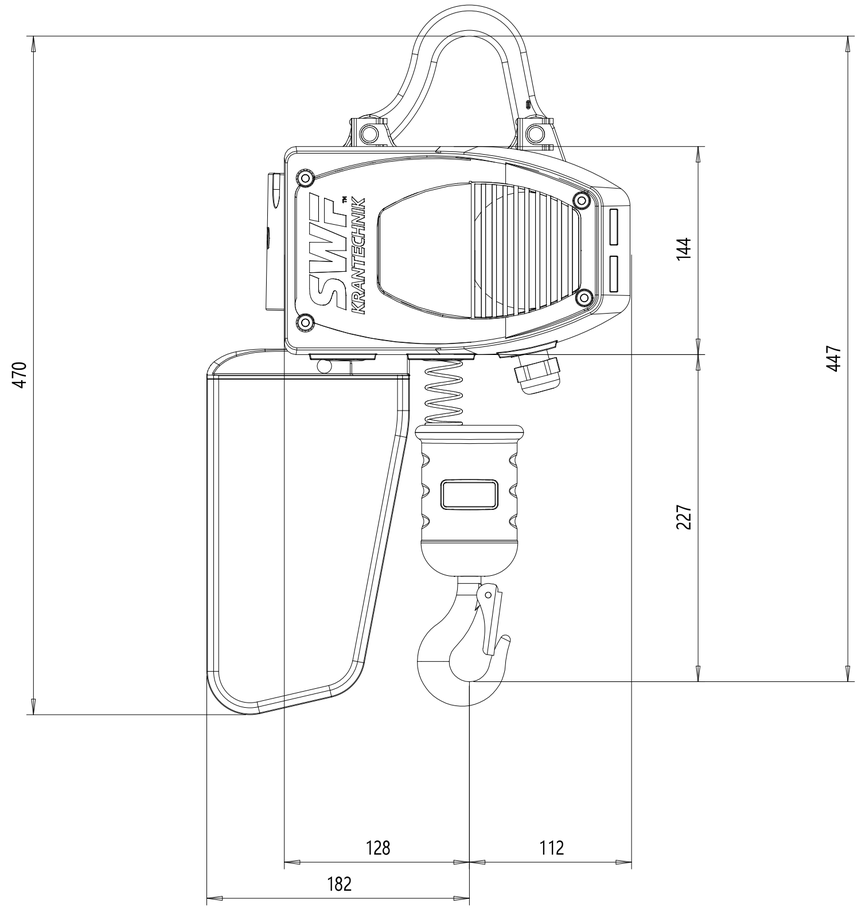

DATI TECNICI

CARICO	: 500 kg
ALZATA GANCIO	: 3 m
VELOCITÁ DI SOLLEVAMENTO	: 4 / 1 m/min
PESO DEL CARRELLO	: 27 kg
CLASSE PARANCO	: M5
ALIMENTAZIONE ELETTRICA	: 400 / 48 V; 50 Hz

Pos	Totale	Descrizione	Specifiche

smij pa/ Italy Progetto	Chd	Appd	Ref disegno	DAS / M@ngo Vx proj
2021.05.25 Data	-			1 : 3
Rep.	-			M-film
	smij pa-000148-1-AA-045.2P-F-O-H			Scopo

Doppio

SWF KRANTECHNIK

SWF Krantechnik reserves the right to alter or amend the above information without notice.
The document and the drawing contained herein, are the exclusive property of SWF Krantechnik and represents a non-public, confidential and proprietary trade secret that may not be reproduced, disclosed to third parties, altered or otherwise employed in any manner whatsoever without the express written consent of SWF Krantechnik GmbH. Copyright © SWF Krantechnik. All rights reserved.

smij pa-000148-1-AA-045.2P-F-O-HI

REV	MODIFICA DESCRIZIONE	ECN	DATA	REVISIONATO DA	APPROVATO DA

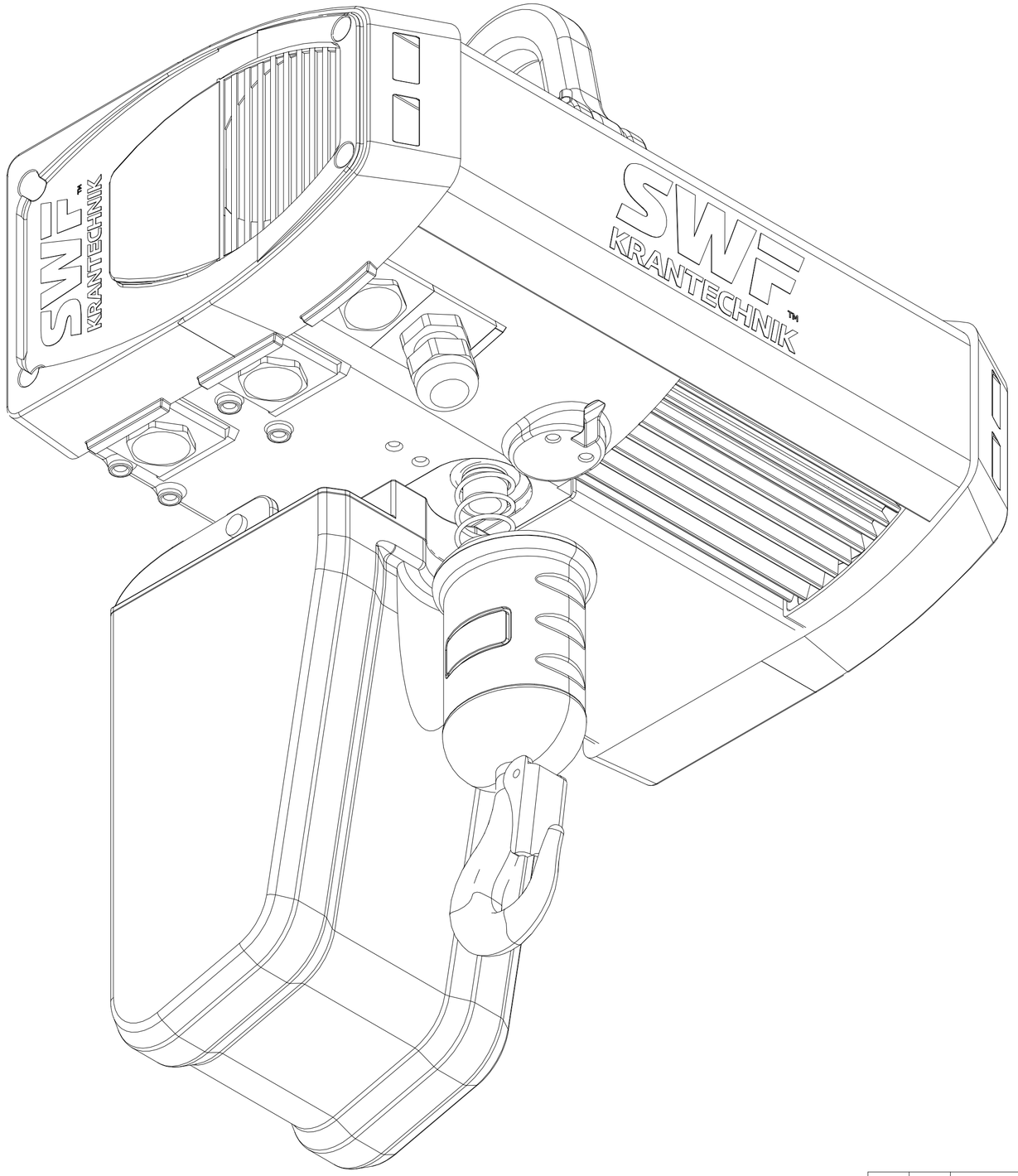

Pos	Totale	Descrizione	Specifiche

Progetto: smij pa/Italy	Chd	Appd	Ref disegno	DAS / M@ngo Vx proj
Data: 2021.05.25	-			1:2.5
Rep.	-			M-film
SWF KRANTECHNIK	smij pa-000148-1-AA-045.2P-F-O-HI			Scopo

Doppio

SWF Krantechnik reserves the right to alter or amend the above information without notice.
This document and the information contained herein is the exclusive property SWF Krantechnik and represents a non-public.
This document and the information contained herein is the exclusive property SWF Krantechnik, altered or otherwise employed in any manner whatsoever without the express written consent of SWF Krantechnik GmbH. Copyright © SWF Krantechnik. All rights reserved.

smij pa-000148-1-AA-085.1P-F-O-H

REV	MODIFICA DESCRIZIONE	ECN	DATA	REVISIONATO DA	APPROVATO DA

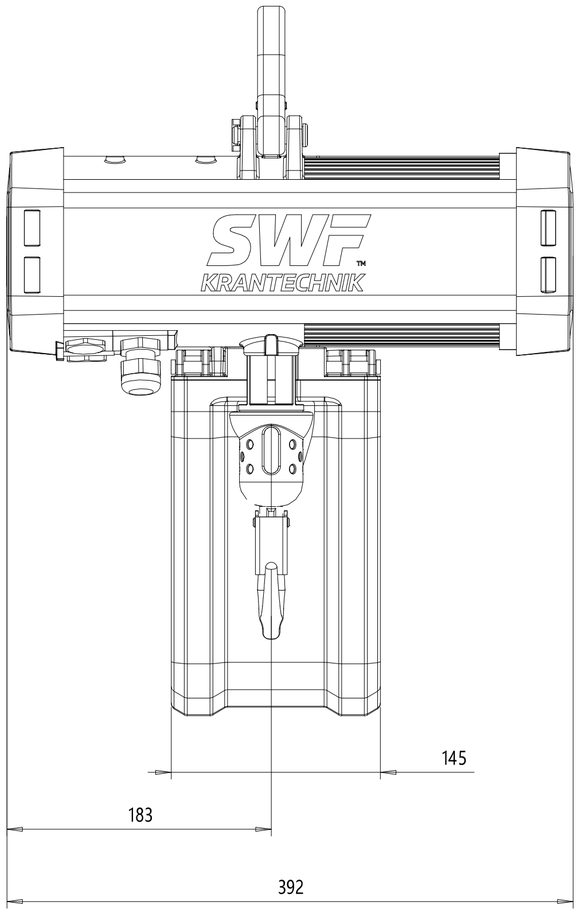

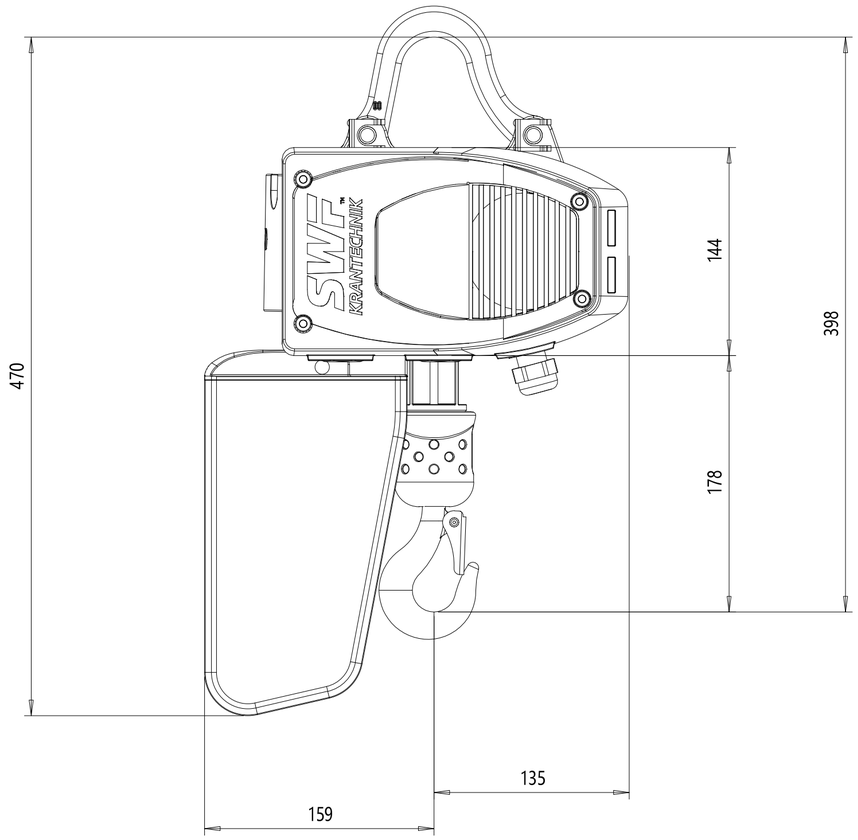

DATI TECNICI

CARICO	: 250 kg
ALZATA GANCIO	: 3 m
VELOCITÁ DI SOLLEVAMENTO	: 8 / 2 m/min
PESO DEL CARRELLO	: 26 kg
CLASSE PARANCO	: M5
ALIMENTAZIONE ELETTRICA	: 400 / 48 V; 50 Hz

Pos	Totale	Descrizione	Specifiche

smij pa/ Italy Progetto	Chd	Appd	Ref disegno	DAS / M@ngo Vx proj
2021.05.25 Data	-			1 : 3
Rep.	-			M-film
	smij pa-000148-1-AA-085.1P-F-O-H			Scopo

Doppio

SWF KRANTECHNIK

SWF Krantechnik reserves the right to alter or amend the above information without notice.
The document and the information contained herein, is the exclusive property of SWF Krantechnik and represents a non-public, confidential and proprietary trade secret that must not be reproduced, disclosed to third parties, altered or otherwise employed in any manner whatsoever without the express written consent of SWF Krantechnik GmbH. Copyright © SWF Krantechnik. All rights reserved.

smij pa-000148-1-AA-085.1P-F-O-HI

REV	MODIFICA DESCRIZIONE	ECN	DATA	REVISIONATO DA	APPROVATO DA

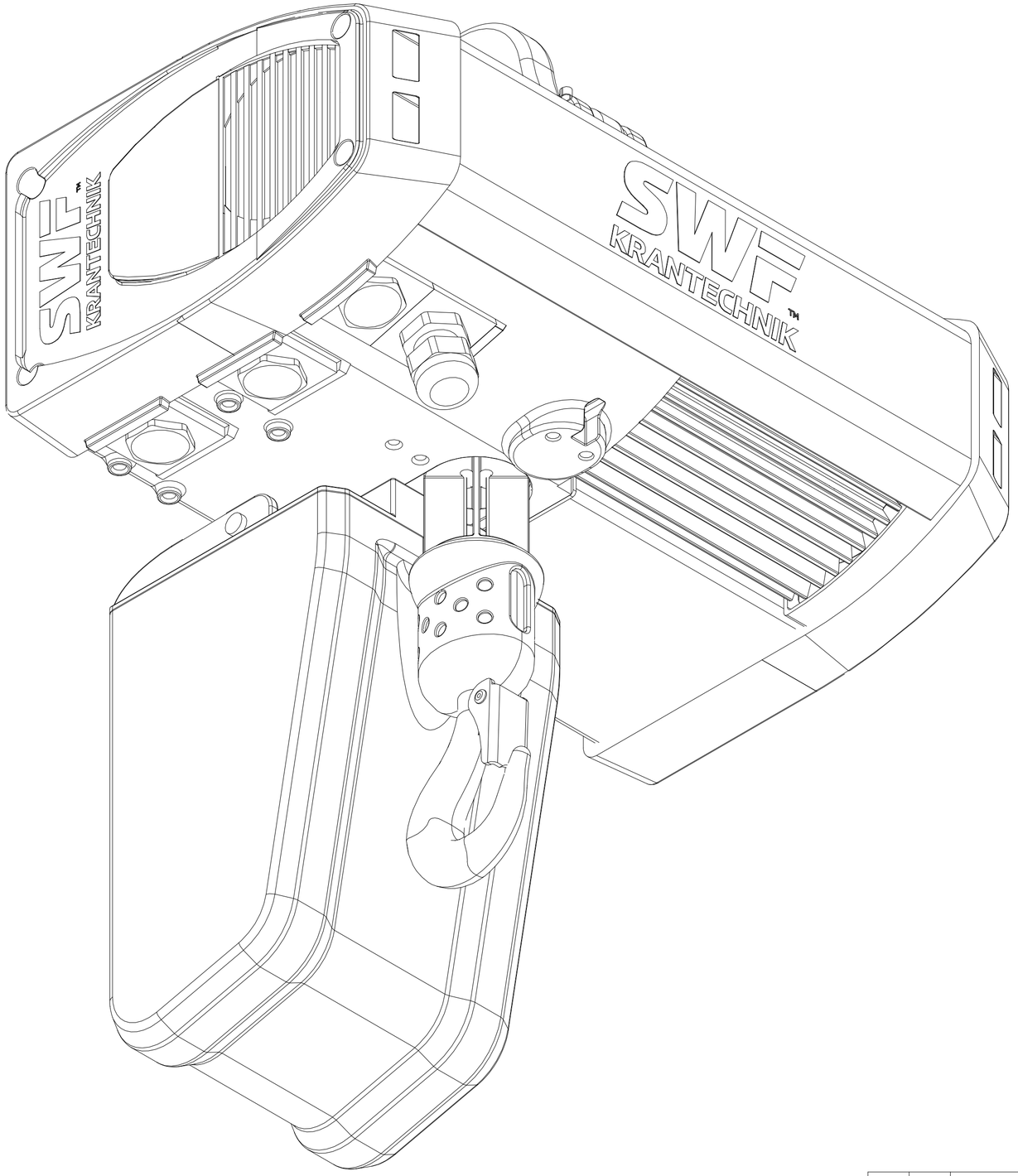

Pos	Totale	Descrizione	Specifiche

smij pa/Italy Progetto	Chd	Appd	Ref disegno	DAS / M@ngo Vx proj
2021.05.25 Data	-			1:2.5
Rep.	-			M-film
SWF KRANTECHNIK	smij pa-000148-1-AA-085.1P-F-O-HI			Scopo

Doppio

SWF Krantechnik reserves the right to alter or amend the above information without notice.
This document and the information contained herein is the exclusive property SWF Krantechnik and represents a non-public, confidential proprietary product. Neither this document nor the information contained therein may not be reproduced, altered or otherwise employed in any manner whatsoever without the express written consent of SWF Krantechnik GmbH. Copyright © SWF Krantechnik. All rights reserved.

smij pa-000148-1-AA-086.1P-F-O-H

REV	MODIFICA DESCRIZIONE	ECN	DATA	REVISIONATO DA	APPROVATO DA

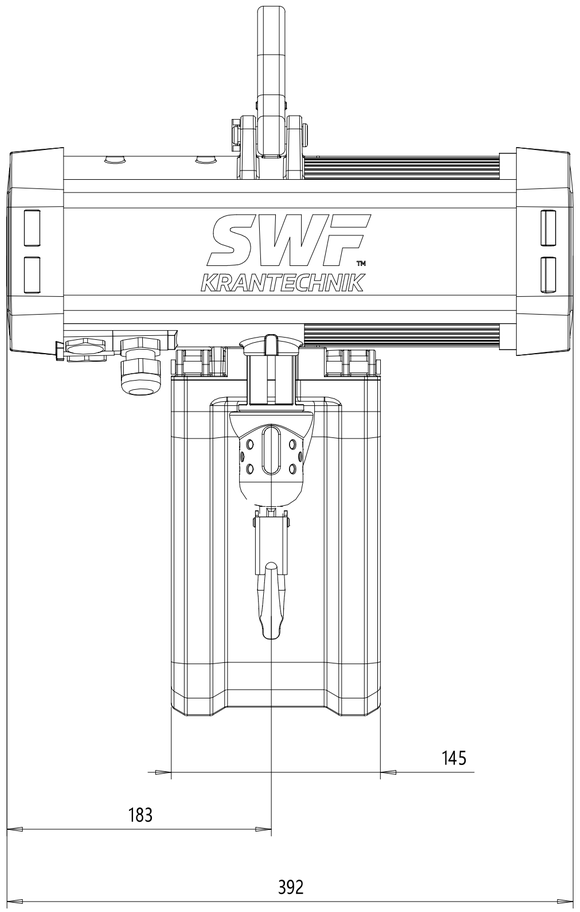

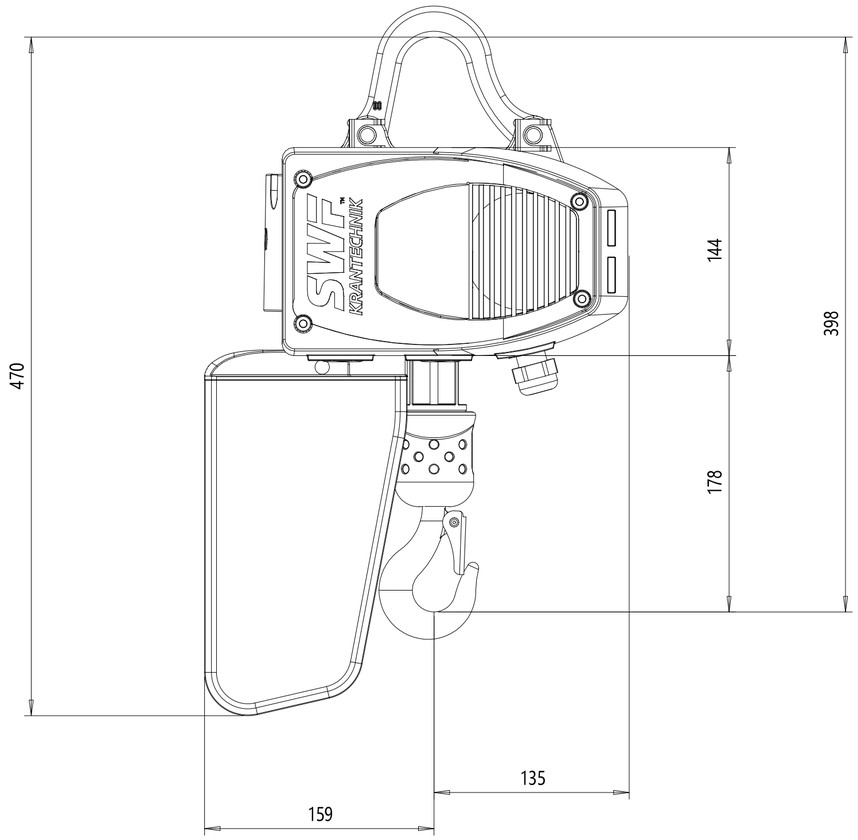

DATI TECNICI

CARICO	: 125 kg
ALZATA GANCIO	: 3 m
VELOCITÁ DI SOLLEVAMENTO	: 8 / 2 m/min
PESO DEL CARRELLO	: 26 kg
CLASSE PARANCO	: M6
ALIMENTAZIONE ELETTRICA	: 400 / 48 V; 50 Hz

Pos	Totale	Descrizione	Specifiche

smij pa/ Italy Progetto	Chd	Appd	Ref disegno	DAS / M@ngo Vx proj
2021.05.25 Data	-			1 : 3
Rep.	-			M-film
	smij pa-000148-1-AA-086.1P-F-O-H			Scopo

Doppio

SWF KRANTECHNIK

SWF Krantechnik reserves the right to alter or amend the above information without notice.
The document and the information contained herein, therefore property of SWF Krantechnik and represents a non-public, confidential and proprietary trade secret that must not be reproduced, disclosed to third parties, altered or otherwise employed in any manner whatsoever without the express written consent of SWF Krantechnik GmbH. Copyright © SWF Krantechnik. All rights reserved.

smij pa-000148-1-AA-086.1P-F-O-HI

REV	MODIFICA DESCRIZIONE	ECN	DATA	REVISIONATO DA	APPROVATO DA

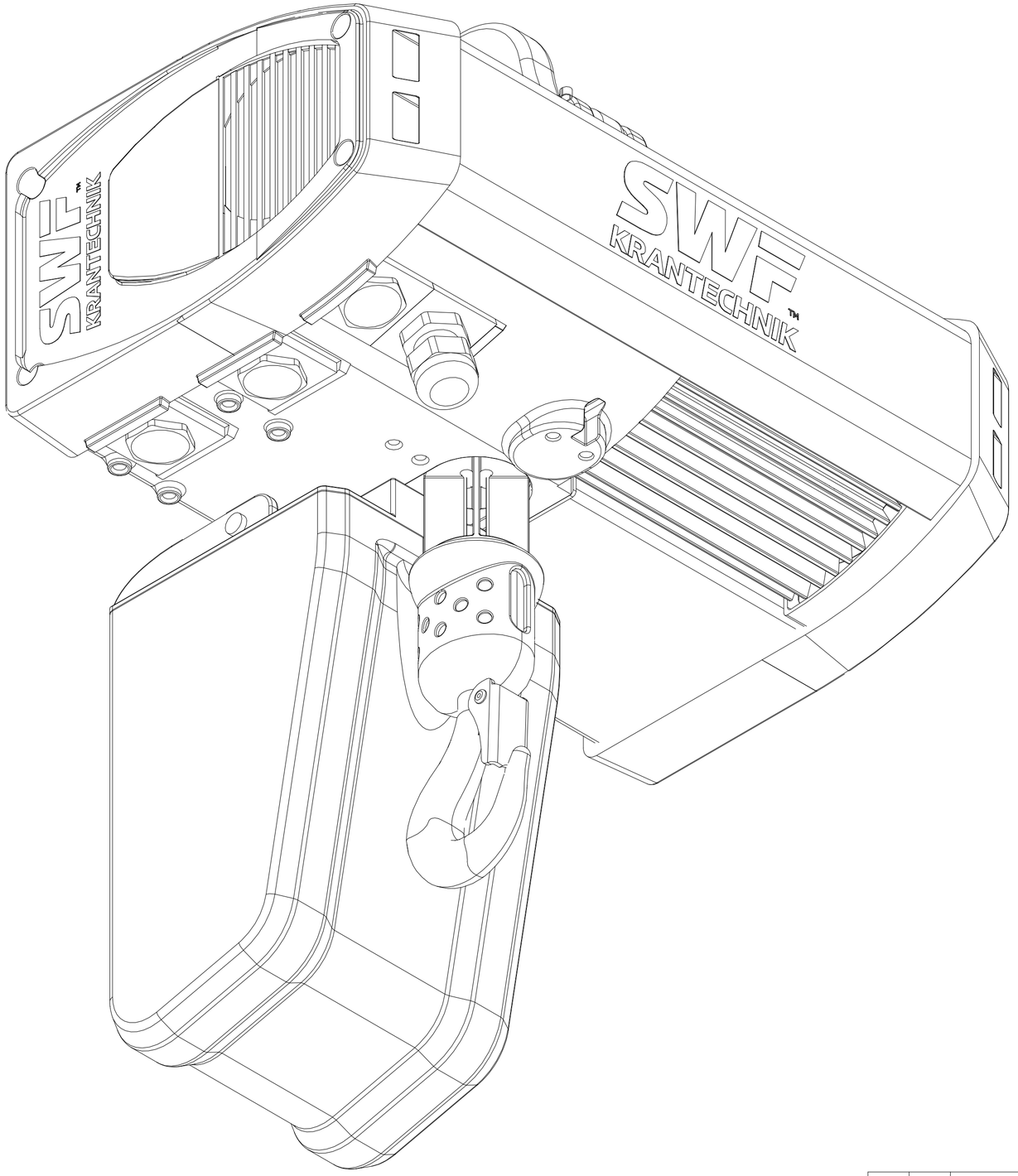

Pos	Totale	Descrizione	Specifiche

smij pa/Italy Progetto	Chd	Appd	Ref disegno	DAS / M@ngo Vx proj
2021.05.25 Data	-			1:2.5
Rep.	-			M-film
SWF KRANTECHNIK	smij pa-000148-1-AA-086.1P-F-O-HI			Scopo

Doppio

SWF Krantechnik reserves the right to alter or amend the above information without notice.
This document and the information contained herein is the exclusive property SWF Krantechnik and represents a non-public, confidential proprietary document. Neither this document nor the information contained therein may be reproduced, disclosed or otherwise employed in any manner whatsoever without the express written consent of SWF Krantechnik GmbH. Copyright © SWF Krantechnik. All rights reserved.

smij pa-000148-1-AB-045.2P-F-O-H

REV	MODIFICA DESCRIZIONE	ECN	DATA	REVISIONATO DA	APPROVATO DA

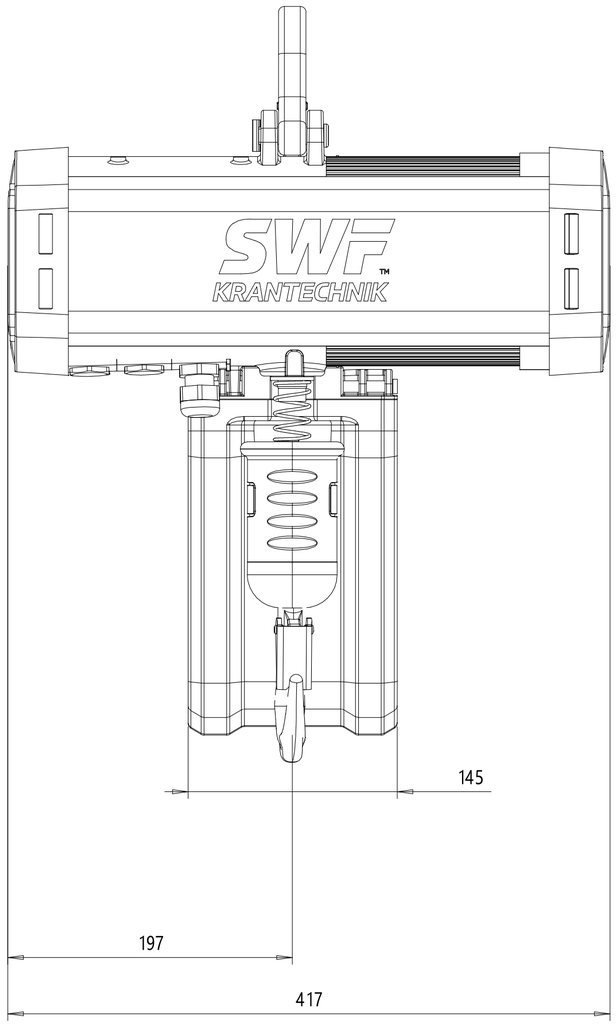

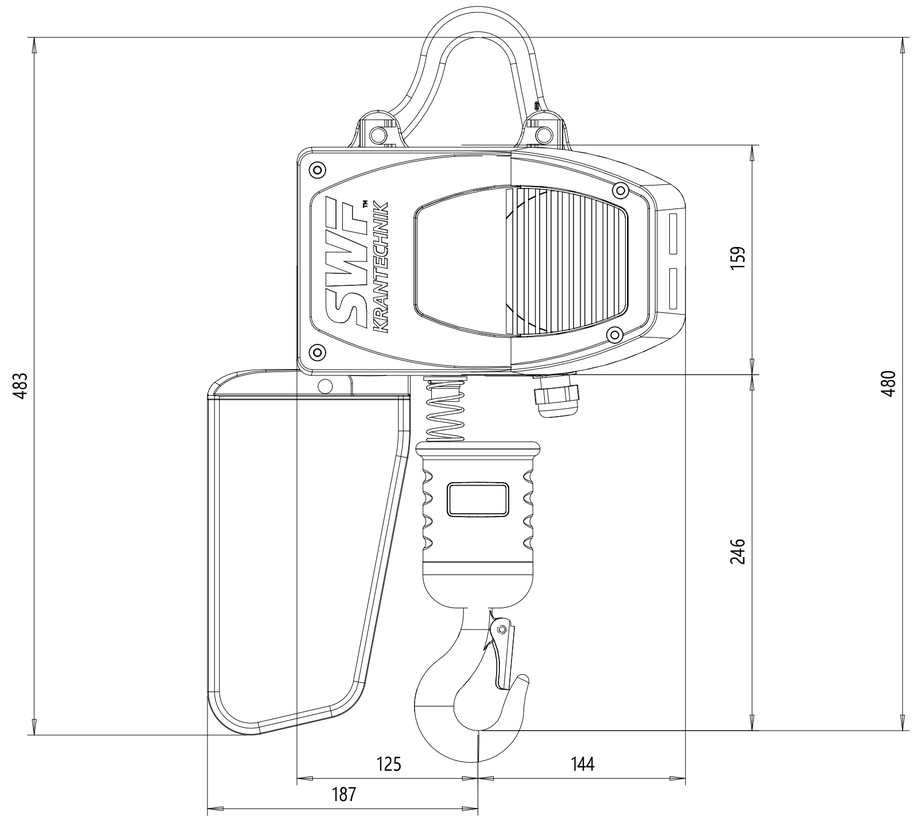

DATI TECNICI

CARICO	: 1000 kg
ALZATA GANCIO	: 3 m
VELOCITÁ DI SOLLEVAMENTO	: 4 / 1 m/min
PESO DEL CARRELLO	: 34 kg
CLASSE PARANCO	: M5
ALIMENTAZIONE ELETTRICA	: 400 / 48 V; 50 Hz

Pos	Totale	Descrizione	Specifiche

smij pa/ Italy Progetto	Chd	Appd	Ref disegno	DAS / M@ngo Vx proj
2021.05.25 Data	-			1 : 3
Rep.	-			M-film
	smij pa-000148-1-AB-045.2P-F-O-H			Scopo

Doppio

SWF KRANTECHNIK

SWF Krantechnik reserves the right to alter or amend the above information without notice.
The document and the information contained therein, is the exclusive property of SWF Krantechnik and represents a non-public, confidential and proprietary trade secret that cannot be reproduced, disclosed to third parties, altered or otherwise employed in any manner whatsoever without the express written consent of SWF Krantechnik GmbH. Copyright © SWF Krantechnik. All rights reserved.

smij pa-000148-1-AB-045.2P-F-O-HI

REV	MODIFICA DESCRIZIONE	ECN	DATA	REVISIONATO DA	APPROVATO DA

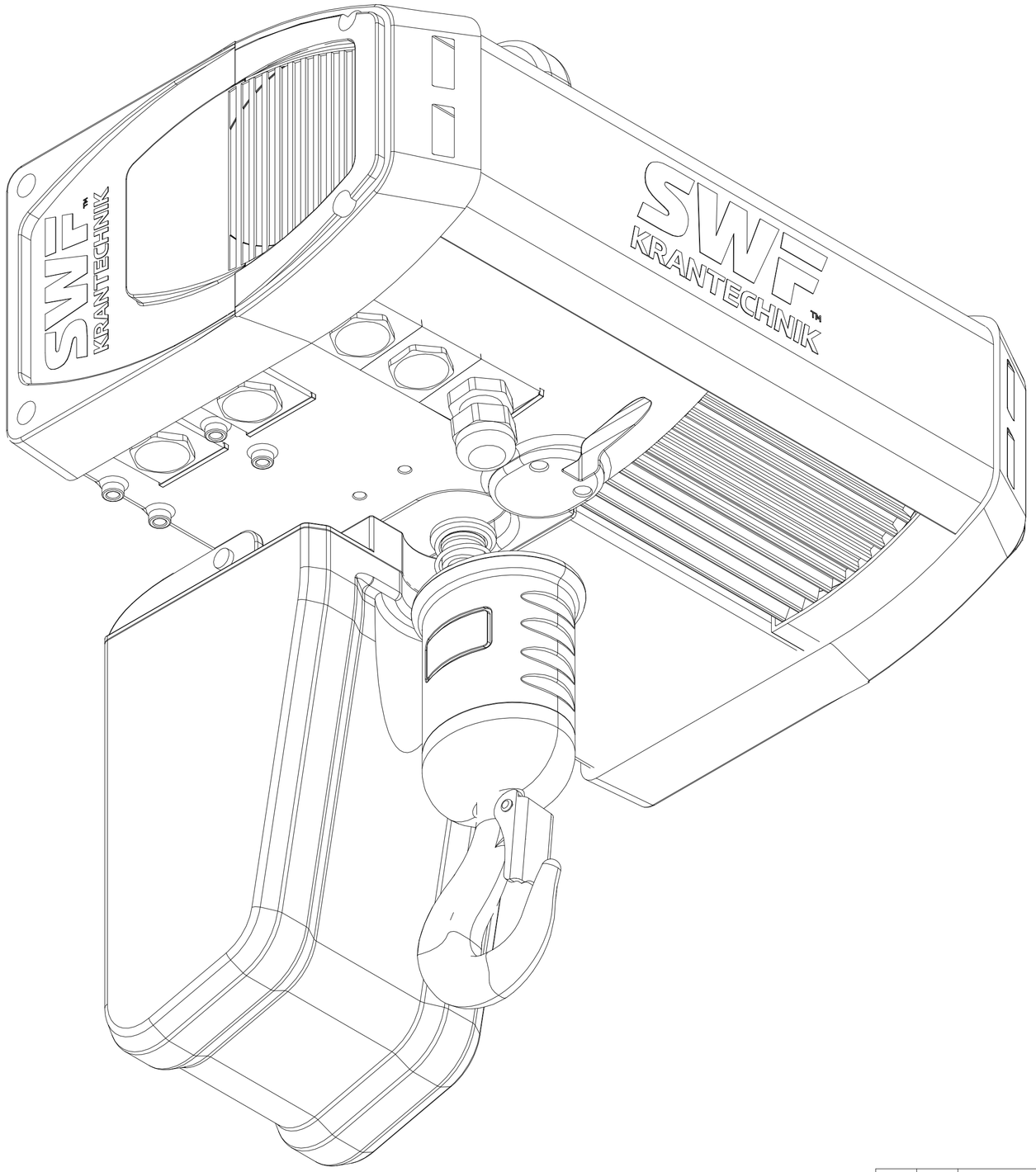

Pos	Totale	Descrizione	Specifiche

smij pa/Italy Progetto	Chd	Appd	Ref disegno	DAS / M@ngo Vx proj
2021.05.25 Data	-			1:2.5
Rep.	-			M-film
	smij pa-000148-1-AB-045.2P-F-O-HI			Scopo

Doppio

SWF KRANTECHNIK

SWF Krantechnik reserves the right to alter or amend the above information without notice.
This document and the information contained herein, is the exclusive property of SWF Krantechnik and represents a non-public, confidential and proprietary trade secret. No part or parts of this document, whether in its entirety or otherwise, may be copied or reproduced in any manner whatsoever without the express written consent of SWF Krantechnik GmbH. Copyright © SWF Krantechnik. All rights reserved.

smij pa-000148-1-AB-085.1P-F-O-H

REV	MODIFICA DESCRIZIONE	ECN	DATA	REVISIONATO DA	APPROVATO DA

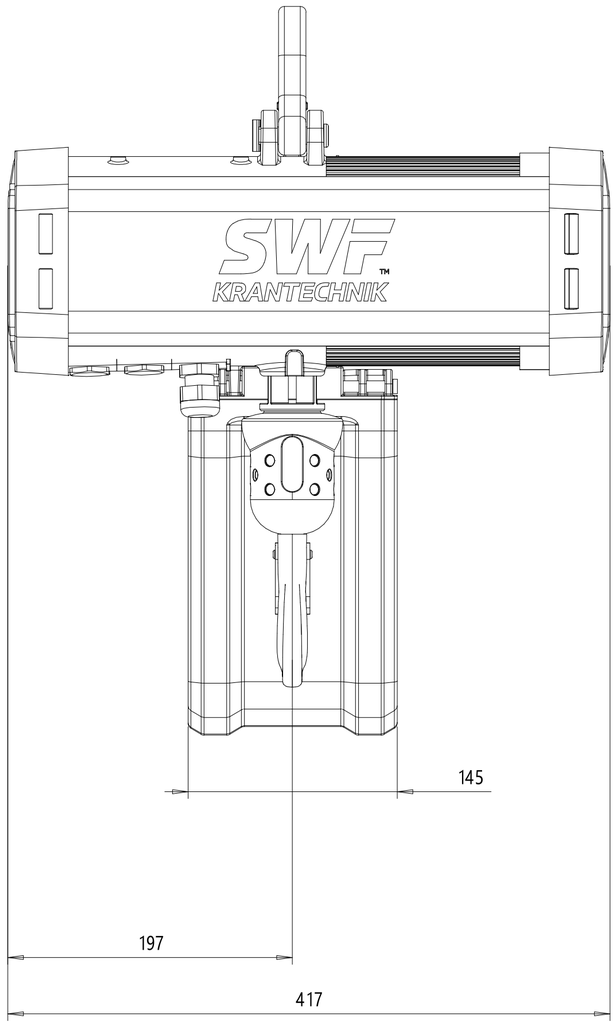

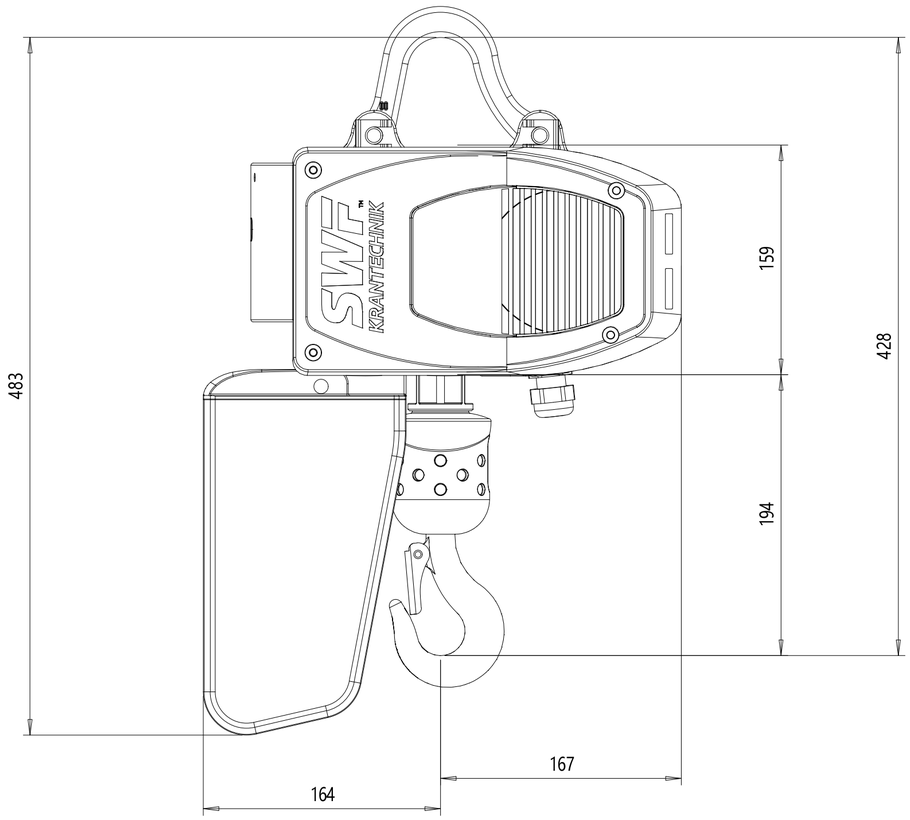

DATI TECNICI

CARICO	: 500 kg
ALZATA GANCIO	: 3 m
VELOCITÁ DI SOLLEVAMENTO	: 8 / 2 m/min
PESO DEL CARRELLO	: 36 kg
CLASSE PARANCO	: M5
ALIMENTAZIONE ELETTRICA	: 400 / 48 V; 50 Hz

Pos	Totale	Descrizione	Specifiche

smij pa/ Italy Progetto	Chd	Appd	Ref disegno	DAS / M@ngo Vx proj
2021.05.25 Data	-			1 : 3
Rep.	-			M-film
SWF KRANTECHNIK	smij pa-000148-1-AB-085.1P-F-O-H			Scopo

Doppio

SWF Krantechnik reserves the right to alter or amend the above information without notice.
This document and the information contained therein, is the exclusive property of SWF Krantechnik and represents a non-public, confidential and proprietary trade secret that may not be reproduced, disclosed to third parties, altered or otherwise employed in any manner whatsoever without the express written consent of SWF Krantechnik GmbH. Copyright © SWF Krantechnik. All rights reserved.

smij pa-000148-1-AB-085.1P-F-O-HI

REV	MODIFICA DESCRIZIONE	ECN	DATA	REVISIONATO DA	APPROVATO DA

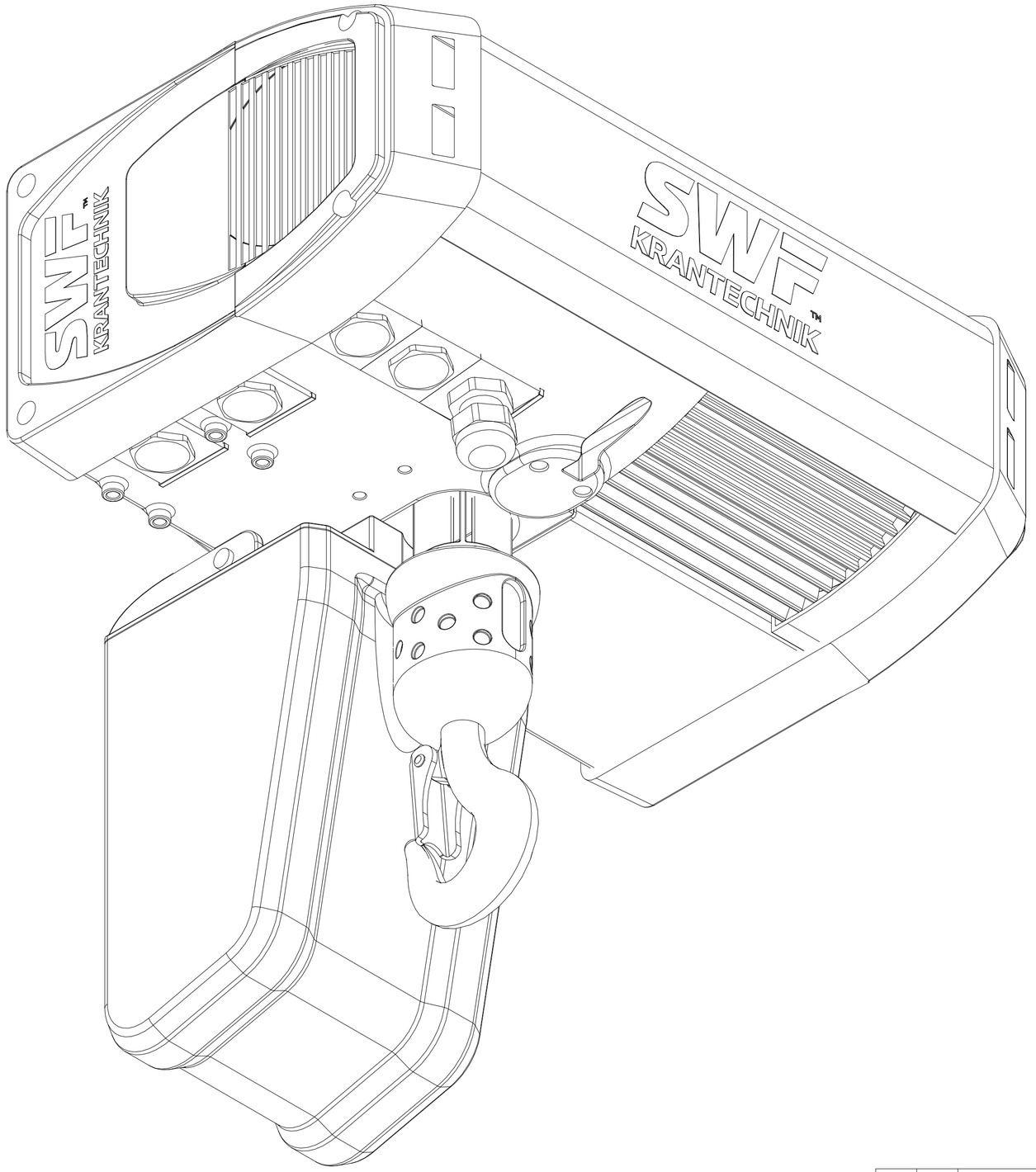

Pos	Totale	Descrizione	Specifiche

smij pa/Italy Progetto	Chd	Appd	Ref disegno	DAS / M@ngo Vx proj
2021.05.25 Data	-			1:2.5
Rep.	-			M-film
SWF KRANTECHNIK	smij pa-000148-1-AB-085.1P-F-O-HI			Scopo

Doppio

SWF Krantechnik reserves the right to alter or amend the above information without notice.
This document and the information contained herein, is the exclusive property of SWF Krantechnik and represents a non-public, confidential and proprietary trade secret. No part or parts may be reproduced, disclosed to third parties, altered or otherwise employed in any manner whatsoever without the express written consent of SWF Krantechnik GmbH. Copyright © SWF Krantechnik. All rights reserved.

smij pa-000148-1-AC-045.2P-F-O-H

REV	MODIFICA DESCRIZIONE	ECN	DATA	REVISIONATO DA	APPROVATO DA

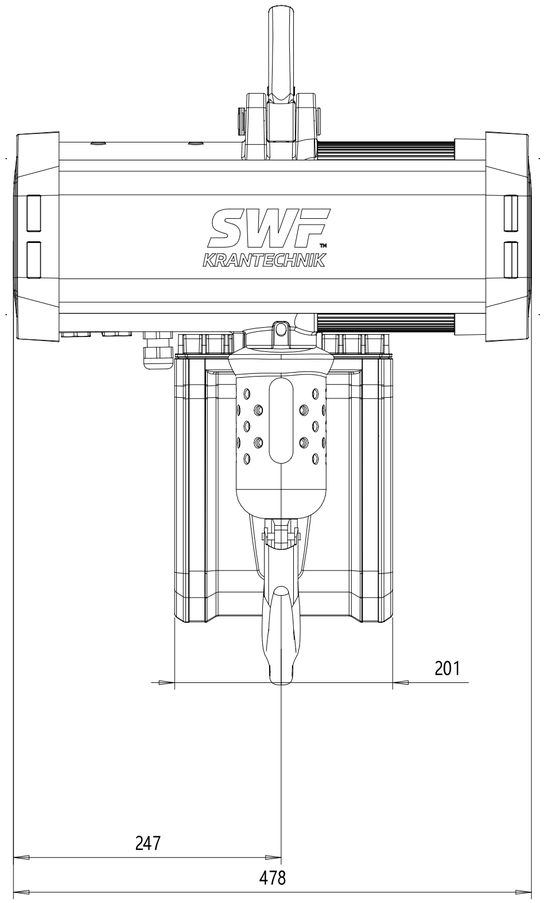

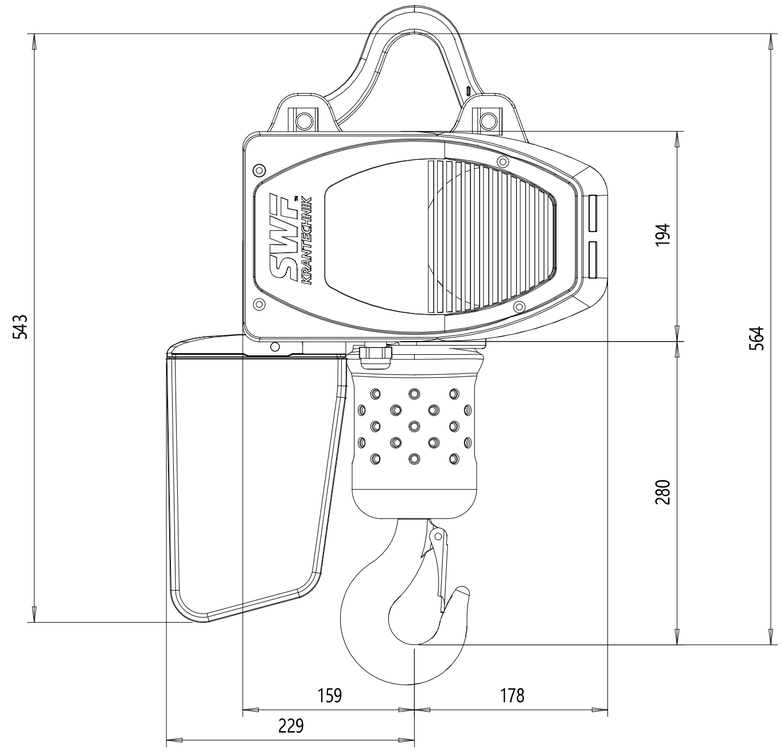

DATI TECNICI

CARICO	: 2000 kg
ALZATA GANCIO	: 3 m
VELOCITÁ DI SOLLEVAMENTO	: 4 / 1 m/min
PESO DEL CARRELLO	: 59 kg
CLASSE PARANCO	: M5
ALIMENTAZIONE ELETTRICA	: 400 / 48 V; 50 Hz

Pos	Totale	Descrizione	Specifiche

smij pa/Italy Progetto	Chd	Appd	Ref disegno	DAS / M@ngo Vx proj
2021.05.25 Data	-			1 : 4
Rep.	-			M-film
SWF KRANTECHNIK	smij pa-000148-1-AC-045.2P-F-O-H			Scopo

Doppio

SWF Krantechnik reserves the right to alter or amend the above information without notice.
This document and the information contained herein, is the sole property of SWF Krantechnik and represents a non-public, confidential and proprietary trade secret that may not be reproduced, disclosed to third parties, altered or otherwise employed in any manner whatsoever without the express written consent of SWF Krantechnik GmbH. Copyright © SWF Krantechnik. All rights reserved.

smij pa-000148-1-AC-045.2P-F-O-HI

REV	MODIFICA DESCRIZIONE	ECN	DATA	REVISIONATO DA	APPROVATO DA

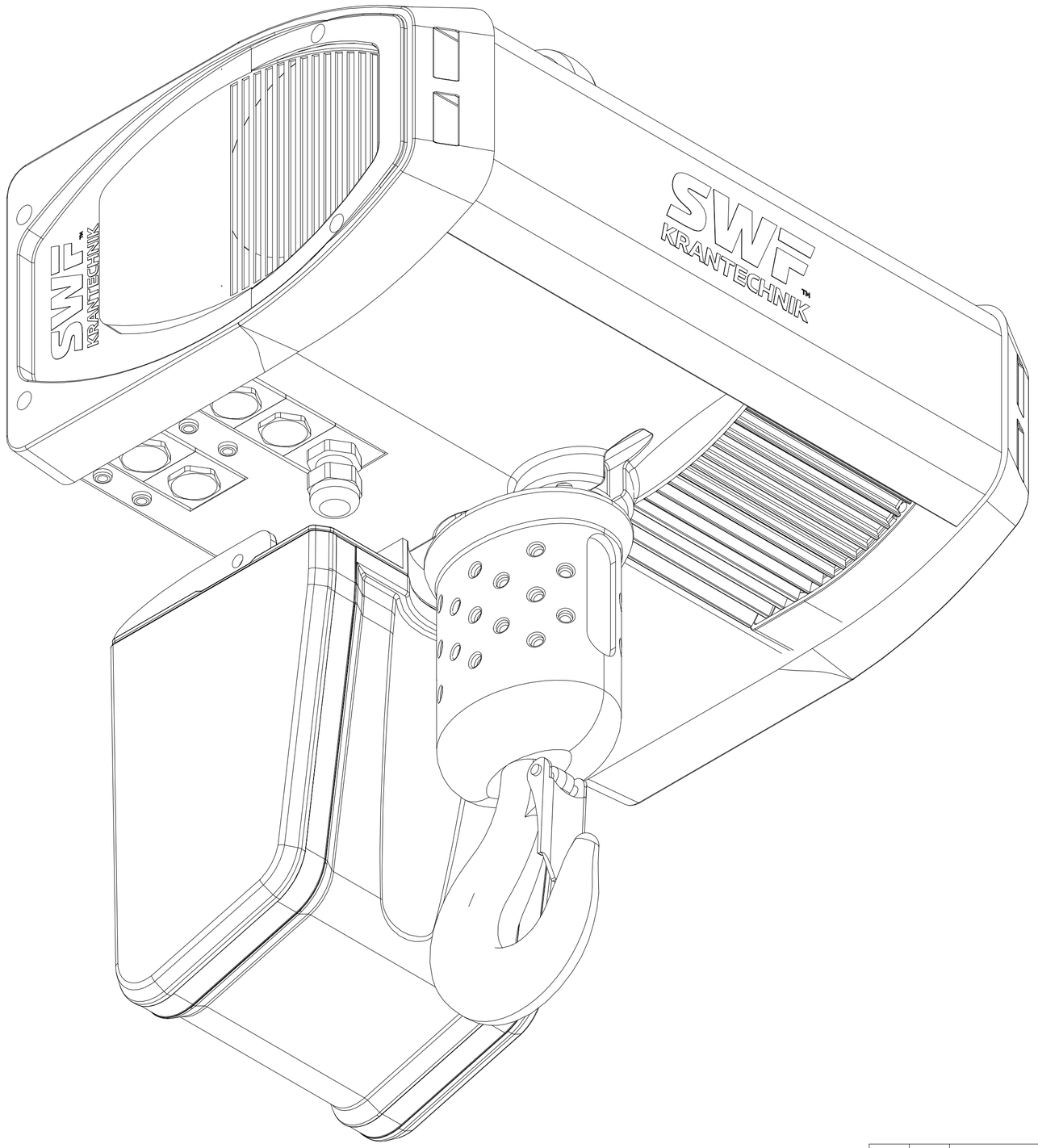

Pos	Totale	Descrizione	Specifiche

smij pa/Italy Progetto	Chd	Appd	Ref disegno	DAS / M@ngo Vx proj
2021.05.25 Data	-			1:2.5
Rep.	-			M-film
				Scopo

Doppio

SWF KRANTECHNIK

smij pa-000148-1-AC-045.2P-F-O-HI

SWF Krantechnik reserves the right to alter or amend the above information without notice.
This document and the information contained herein is the exclusive property SWF Krantechnik and represents a non-public
confidential and proprietary document. Under no circumstances may copies be reproduced, delivered to third parties, altered or otherwise employed in any
manner whatsoever without the express written consent of SWF Krantechnik GmbH. Copyright © SWF Krantechnik. All rights reserved.

smij pa-000157-1-AB-045.1P-F-O-H

REV	MODIFICA DESCRIZIONE	ECN	DATA	REVISIONATO DA	APPROVATO DA

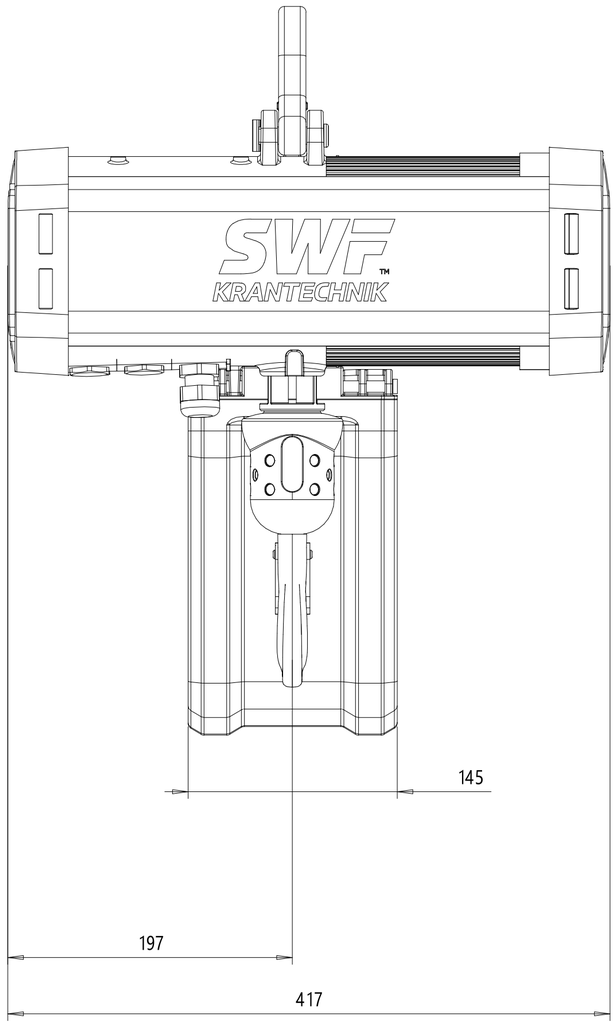

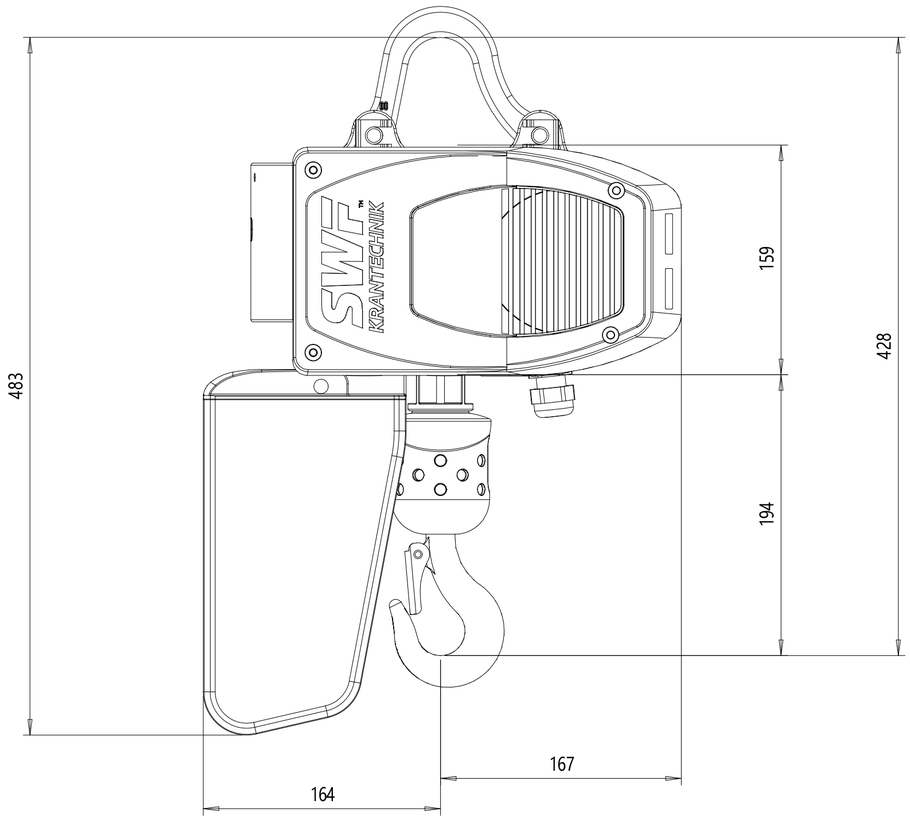

DATI TECNICI

CARICO	: 500 kg
ALZATA GANCIO	: 3 m
VELOCITÁ DI SOLLEVAMENTO	: 4 / 1 m/min
PESO DEL CARRELLO	: 36 kg
CLASSE PARANCO	: M5
ALIMENTAZIONE ELETTRICA	: 400 / 48 V; 50 Hz

Pos	Totale	Descrizione	Specifiche

smij pa/ Italy Progetto	Chd	Appd	Ref disegno	DAS / M@ngo Vx proj
2021.07.08 Data	-			1 : 3
Rep.	-			M-film
SWF KRANTECHNIK	smij pa-000157-1-AB-045.1P-F-O-H			Scopo

Doppio

SWF Krantechnik reserves the right to alter or amend the above information without notice.
The document and the information contained therein, is the exclusive property of SWF Krantechnik and represents a non-public, confidential and proprietary trade secret that cannot be reproduced, disclosed to third parties, altered or otherwise employed in any manner whatsoever without the express written consent of SWF Krantechnik GmbH. Copyright © SWF Krantechnik. All rights reserved.

smij pa-000157-1-AB-045.1P-F-O-HI

REV	MODIFICA DESCRIZIONE	ECN	DATA	REVISIONATO DA	APPROVATO DA

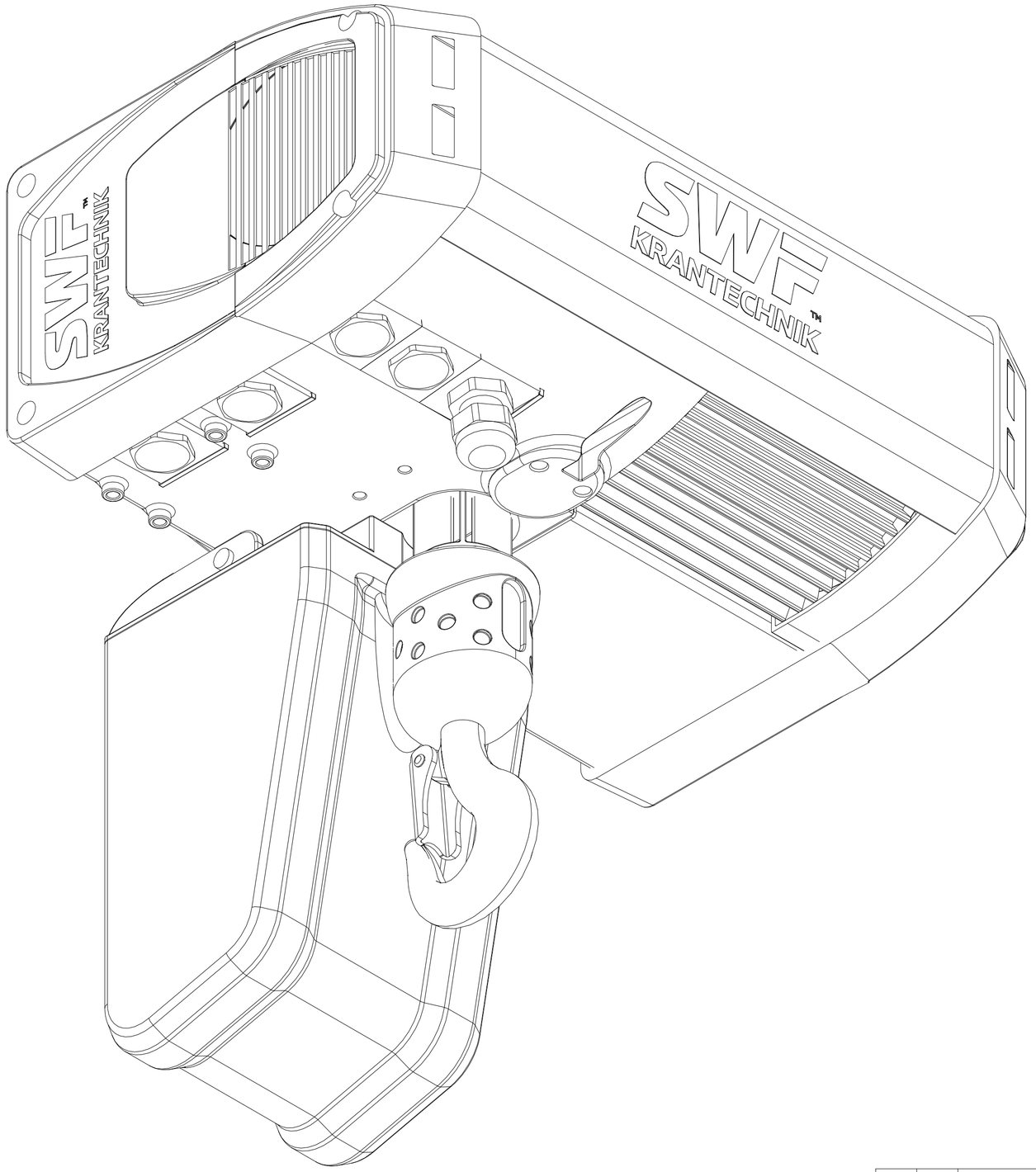

Pos	Totale	Descrizione	Specifiche

smij pa/Italy Progetto	Chd	Appd	Ref disegno	DAS / M@ngo Vx proj
2021.07.08 Data	-			1:2.5
Rep.	-			M-film
SWF KRANTECHNIK	smij pa-000157-1-AB-045.1P-F-O-HI			Scopo

Doppio

SWF Krantechnik reserves the right to alter or amend the above information without notice.
This document and the information contained herein, is the exclusive property of SWF Krantechnik and represents a non-public, confidential and proprietary trade secret. No part or parts of this document may be reproduced, disclosed to third parties, altered or otherwise employed in any manner whatsoever without the express written consent of SWF Krantechnik GmbH. Copyright © SWF Krantechnik. All rights reserved.